Connecting your business

A170C



DECT headset

Short User Manual

English German Italian French Spanish Greek Polish Russian

V: 11/15/2026 - 3

Getting started

(A) Unpacking and inspecting the delivery content

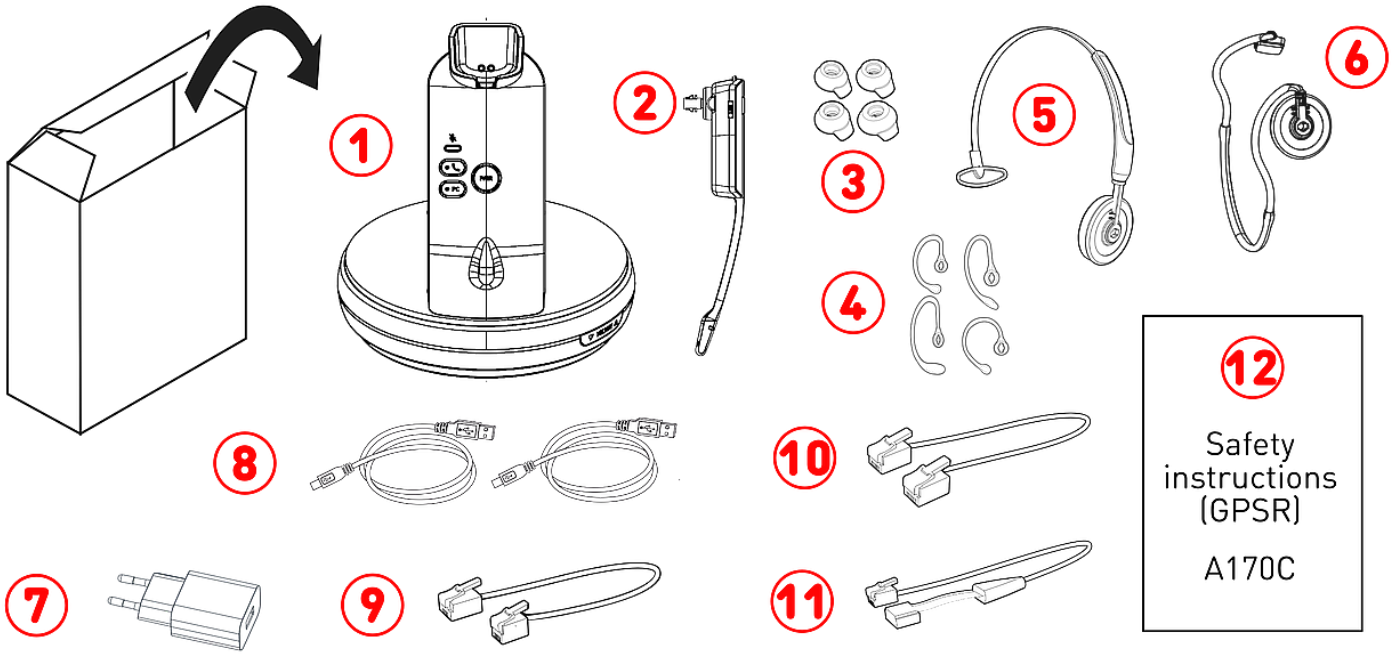

1. Base station (DECT) | Charging cradle
2. Headset
3. Earbuds (4 ×)
4. Earhooks (4 ×)
5. Headband
6. Neckband
7. Power adapter
8. 2 × 1.8 m USB-A to USB-C cable
9. Phone headset adapter: RJ45-8P4C to RJ9-4P4C cable
10. EHS adapter#1: RJ12-6P6C to RJ12-6P6C cable
11. EHS adapter#2: RJ12-6P6C to 4-pin cable
12. **Safety instructions (GPSR)**

(B) Interfaces and connections

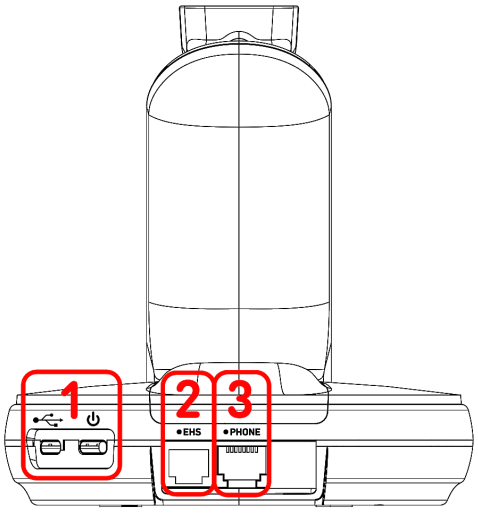

1. 2 × USB-C sockets
   - #1: USB powering → see **D-1**
   - #2: PC connectivity → see **E-1**
2. RJ12-6P6C socket (*EHS*) → EHS adapter
   - #1: EHS#1 connectivity → see **E-2**
   - #2: EHS#2 connectivity → see **E-3**
3. RJ45-8P4C socket (*PHONE*) → Phone headset adapter
   - RJ45-8P4C to RJ9-4P4C cable → see **E-2/3**

© 2026 Snom Technology GmbH

(C) Getting to know the A170C components → Base station (DECT) / Headset

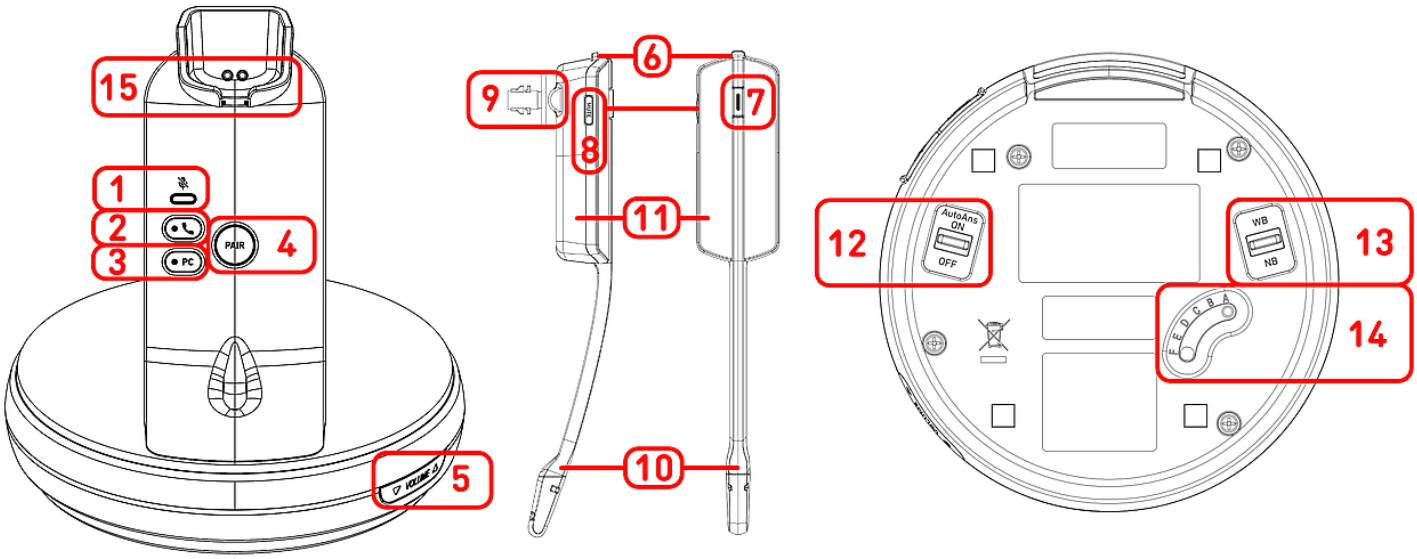

1. Mute status indication: 1 red LED
2. Function key: Phone (with green LED)
3. Function key (*PC*): PC (with green LED)
4. Function key (*PAIR*): DECT pairing
5. Function key (*MICROPHONE*): Microphone volume + / - (rocker)
6. Function key (*VOL +* / *VOL -*): Volume + / - miniature control stick
7. Function key: Onhook / offhook (with multicolour LED)
8. Function key (*MUTE*): **Muting and unmuting the microphone** → see **C-1**
9. Headset speaker
10. Microphone
11. Battery compartment → Battery, preinstalled, non-removable
12. Auto-answer switch (*AutoAns*)
    - *ON*: Answer phone by removing headset from charging cradle
13. Bandwidth switch
    - *NB*: Narrowband calls
    - *WB*: Wideband calls
14. Sound quality switch
    - *A*: Snom desk phone (D1xx, D3xx, D7xx, D8xx)
    - *B, C, D, E, F*: For other brands, try different settings until the sound is clear.
15. Charging cradle: Magnetic charging mount

© 2026 Snom Technology GmbH

Preparing the A170C for use

(D) Connecting / Charging the battery

1. Insert the USB-A connector into the power adapter and the USB-C connector into the socket on the base station.
2. Plug the USB power adapter into a wall outlet and place the headset onto the charging mount of the base station. The LED on the headset lights up (red: 0 to 50 % orange: 50 to < 100%, green: 100%), indicating that the handset is charging.

(E) Connecting the A170C to a Snom phone

Connect the A170C to a Snom phone or computer. Use the supplied cables as shown in the following illustration.

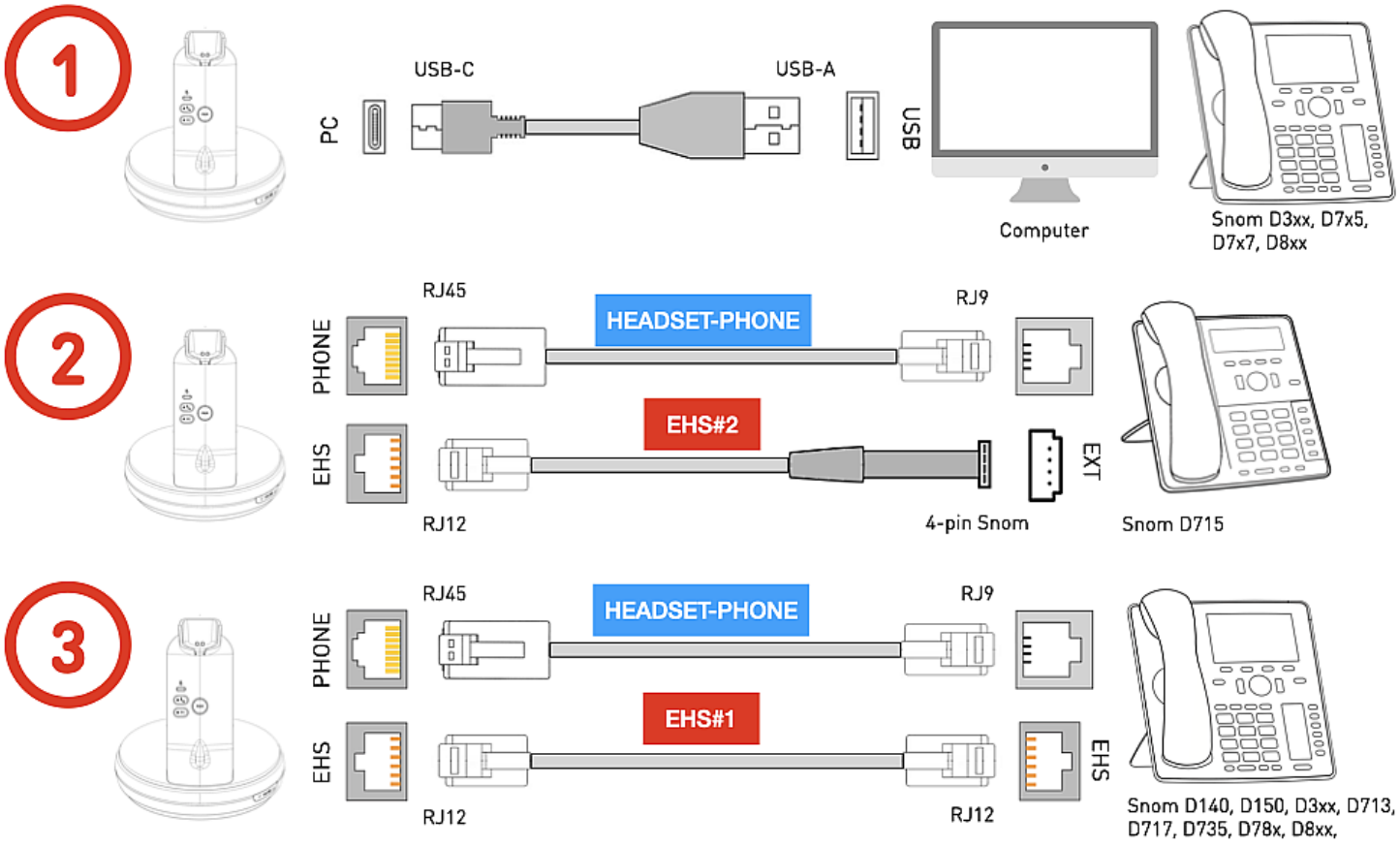

1. Use this option if you want to connect the A170C either as a headset for a telephony software solution on your computer or directly to your Snom desk phone via a free USB port. → **Snom D3xx, D717, D735, D785, D8xx**
2. This option allows you to connect the A170C with full functionality to current and discontinued D7xx desk phones. → **Snom D715** → proprietary 4-pin socket
3. If your Snom desk phone does not have a USB port or does not have a free one, use this option. → **Snom D140, D150, D3xx, D713, D717, D735, D785, D8xx** → RJ12 socket

© 2026 Snom Technology GmbH

Putting the A170C into operation

Once the battery is fully charged and all cables are connected, the A170C is ready for use. If using the A170C with a Snom desk phone, activate headset mode on that device.

Snom 1xx, 3xx, 7xx: press



Headset

D8xx: press



Headset

Using the A170C

(F) Choose one of the three wearing options

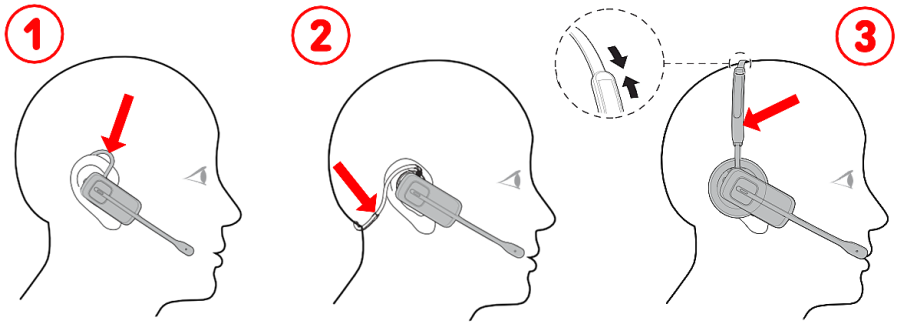

Three wearing styles:

1. over-the-ear → see **A-4**
2. neckband → see **A-6**
3. over-the-head → see **A-5**

(G) Call control, mute and volume control functions

- **Switching the audio connection:**
  - Press the button **C-2** if you connected the Snom phone using the cables **A-9 + A-10/11**. Lights up green when and as long as the mode is activated.
  - If you connected your Snom phone or computer using the USB cable, press the button **C-3**. Lights up green when and as long as the mode is activated.
- **Making calls** Press 1 × **C-7** and on the phone enter the number to dial and confirm.
- **Accepting calls** With an incoming call ringing, press 1 × **C-7**.
- **Terminating calls** Press 1 × **C-7**.
- **Muting and unmuting the microphone** Press 1 × **C-8**. Lights up red when and as long as the microphone is muted.
- **Adjusting the volume when in call** Press **C-6** +/-.
- **Adjusting the microphone volume** Press **C-5** +/-.

© 2026 Snom Technology GmbH

Troubleshooting

Contacting Snom Support

Click this text (or scan the QR code) to read and follow the detailed instructions given on our website.

Submitting a ticket

Click this text (or scan the QR code) to read and follow the detailed instructions given on our website.

Further information

Click on the text or scan the corresponding QR code to access the respective online resource:

A170C webpage **Snom Service Hub A170C** **Safety instructions A170C** **Data sheet A170C**

Disclaimer

Snom, the names of Snom products, and Snom logos are trademarks owned by Snom Technology GmbH. All product specifications are subject to change without notification. Snom Technology GmbH reserves the right to revise and change this document at any time, without being obliged to announce such revisions or changes beforehand or after the fact. Although due care has been taken in the compilation and presentation of the information in this document, the data upon which it is based may have changed in the meantime. Snom therefore disclaims all warranties and liability for the accurateness, completeness, and currentness of the information published, except in the case of intention or gross negligence on the part of Snom or where liability arises due to binding legal provisions.

© 2026 Snom Technology GmbH